

ADJUSTABLE CORNER BRACKET FOR LED FLOOD LIGHTS

Product Code : LM-FL-CB

01 PRODUCT OVERVIEW

Adjustable, steel corner bracket for LED flood lights. Designed for secure corner mounting with horizontal aiming adjustment. Suitable for any outdoor installations where simple yet durable mounting accessory is required. C4 corrosion resistance for harsh Irish weather environment.

KEY FEATURES

- Q235 Steel Structure
- Black powder coated finish
- C4 paint for corrosion resistance
- Adjustable aiming design
- 9 mounting holes on installation plate
- 137° adjustment arc
- 3mm steel thickness
- Suitable for LED Flood light installation
- Mechanical, non-electrical accessory

SPECIFICATIONS

PRODUCT CODE	LM-FL-CB
PRODUCT NAME	FR ADJUSTABLE CORNER BRACKET
APPLICATION	CORNER INSTALLATION OF LED FLOOD LIGHTS
MATERIAL	Q355 STEEL
FINISH	BLACK POWDER COATED
CORROSION RESISTANCE	C4 PAINTED
LENGTH	220MM
BRACKET ARM SIDE SECTION	50MM X 40MM
STEEL THICKNESS	3.0MM
MOUNTING HOLES	9X 8.2MM
PIVOT HOLE	8.5MM
AUXILIARY HOLE	5.2MM
ADJUSTMENT ARC	137
CORNER RADIUS	R6
SALT SPRAY TEST	48H, 5% NACL MIST, 35 C
DIMMENTION UNITS	MM

DIMENSIONS

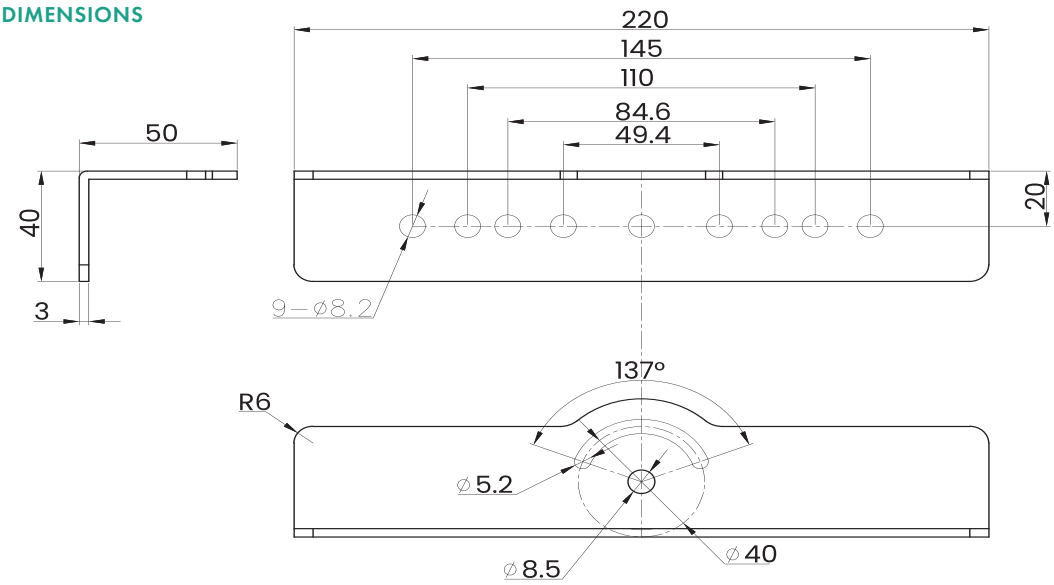

OVERVIEW



